Distance bushings

Steel **GN 609**
Stainless Steel **GN 609.5**

INOX STAINLESS STEEL

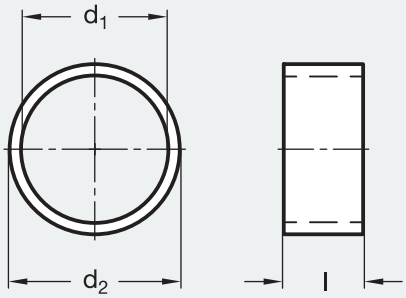

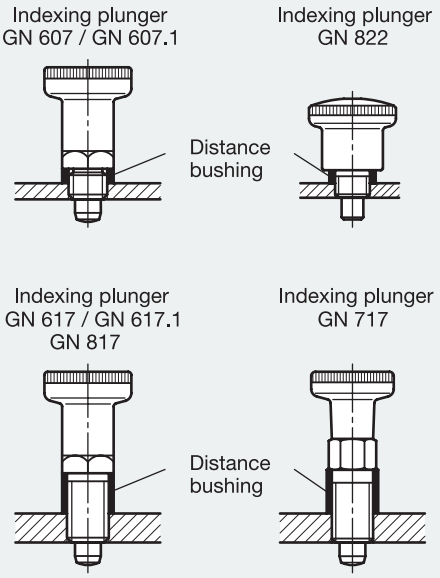

d_1 H12	d_2 – 0,1	Length l ± 0,1						for Indexing plungers / Mini indexing plungers GN 607 GN 607.1	GN 617 GN 617.1	GN 717	GN 817	GN 822
8	10	2	3	4	6	8	10	–	–	Gr. 5	Gr. 4	Gr. 4 / 5
10	12	2	4	6	8	10	12	–	Gr. 5	Gr. 6	Gr. 5	Gr. 6 / 7
12	14	2	4	6	8			–	Gr. 6	Gr. 8	Gr. 6	–
	17	2	4	5				Gr. 6	–	–	–	–
16	17	4	6	8	10	12		–	–	–	Gr. 8 / 10	–
	19	2	4	6	8	10	12	Gr. 8	Gr. 8	–	–	–

Specification

GN 609
Steel
blackened

GN 609.5
Stainless Steel
German Material No. 1.4305

ISO-Fundamental Tolerances Page 888

Stainless Steel characteristics Page 894

Information

Distance bushings GN 609 and Stainless Steel-Distance bushings GN 609.5 compensate for the body thread lengths on the indexing plungers to allow mounting through walls of varying thickness.

How to order

Distance bushing
GN 609-12-14-8

Code No. | d_1 | d_2 | Length l

Stainless Steel-Distance bushings
GN 609.5-16-17-4

Code No. | d_1 | d_2 | Length l